工業技術研究院
Industrial Technology Research Institute

ITRI-UGV-WD050-BP

SIZE AND WEIGHT	
DIMENSIONS(L x W x H)	55 x 50 x 38 (cm)
BASE WEIGHT	75(kg)
SPEED AND PERFORMANCE	
MAX. PAYLOAD	50(kg)
MAX. SPEED	0~3(km/hr)
TRANSMISSION	Differential Drive
BATTERY AND POWER SYSTEM	
BATTERY CHEMISTRY	LiFePO4
CAPACITY	45 (AH) at 24V
CHARGE TIME	5hrs (If the battery is completely drained)
CHARGE CURRNET	10 Amps
CHARGE METHOD	Plug-in Charging
INTERFACING AND COMMUNICATION	
CONTROL MODES	Remote control, Computer controlled
FEEDBACK	Battery status, Motor status
COMMUNICATION	SBUS, RS485
ENVIRONMENT	
OPERATING TEMPERATURE	0 to 50 ˚C

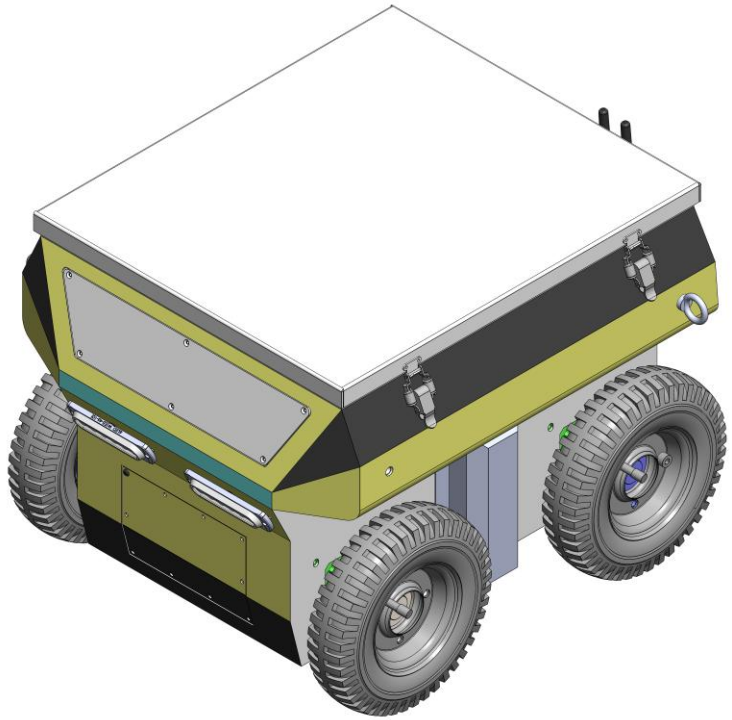

工業技術研究院機密資料 禁止複製、轉載、外流 ITRI CONFIDENTIAL DOCUMENT DO NOT COPY OR DISTRIBUTE

工業技術研究院
Industrial Technology Research Institute

ITRI-UGV-TD050-BP

SIZE AND WEIGHT	
DIMENSIONS(L x W x H)	50 x 56 x 40 (cm)
BASE WEIGHT	56(kg)
SPEED AND PERFORMANCE	
MAX. PAYLOAD	50(kg)
MAX. SPEED	0~3(km/hr)
TRANSMISSION	Differential Drive
BATTERY AND POWER SYSTEM	
BATTERY CHEMISTRY	LiFePO4
CAPACITY	45 (AH) at 24V
CHARGE TIME	5hrs (If the battery is completely drained)
CHARGE CURRNET	10 Amps
CHARGE METHOD	Plug-in Charging
INTERFACING AND COMMUNICATION	
CONTROL MODES	Remote control, Computer controlled
FEEDBACK	Battery status, Motor status
COMMUNICATION	SBUS, RS485
ENVIRONMENT	
OPERATING TEMPERATURE	0 to 50 ˚C

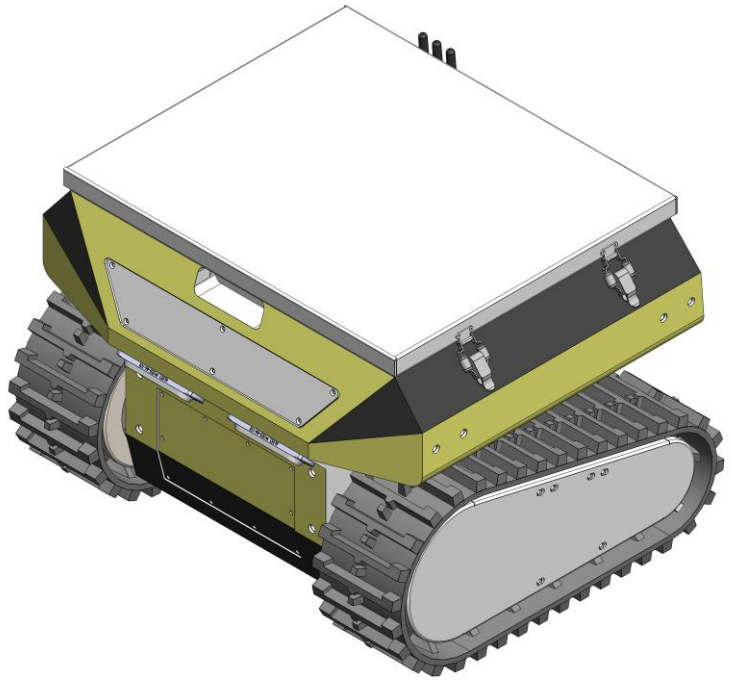

工業技術研究院機密資料 禁止複製、轉載、外流 ITRI CONFIDENTIAL DOCUMENT DO NOT COPY OR DISTRIBUTE

工業技術研究院
Industrial Technology
Research Institute

ITRI-UGV-WD250-BP

SIZE AND WEIGHT	
DIMENSIONS(L x W x H)	100 × 75 × 60 (cm)
BASE WEIGHT	205(kg)
SPEED AND PERFORMANCE	
MAX. PAYLOAD	250(kg)
MAX. SPEED	0~4(km/hr)
TRANSMISSION	Differential Drive
BATTERY AND POWER SYSTEM	
BATTERY CHEMISTRY	LiFePO4
CAPACITY	30 (AH) at 48V (Customized options available)
CHARGE TIME	3hrs (If the battery is completely drained)
CHARGE CURRNET	10 Amps
CHARGE METHOD	Plug-in Charging
INTERFACING AND COMMUNICATION	
CONTROL MODES	Remote control, Computer controlled
FEEDBACK	Battery status, Motor status
COMMUNICATION	SBUS, RS485
ENVIRONMENT	
OPERATING TEMPERATURE	0 to 50 ˚C

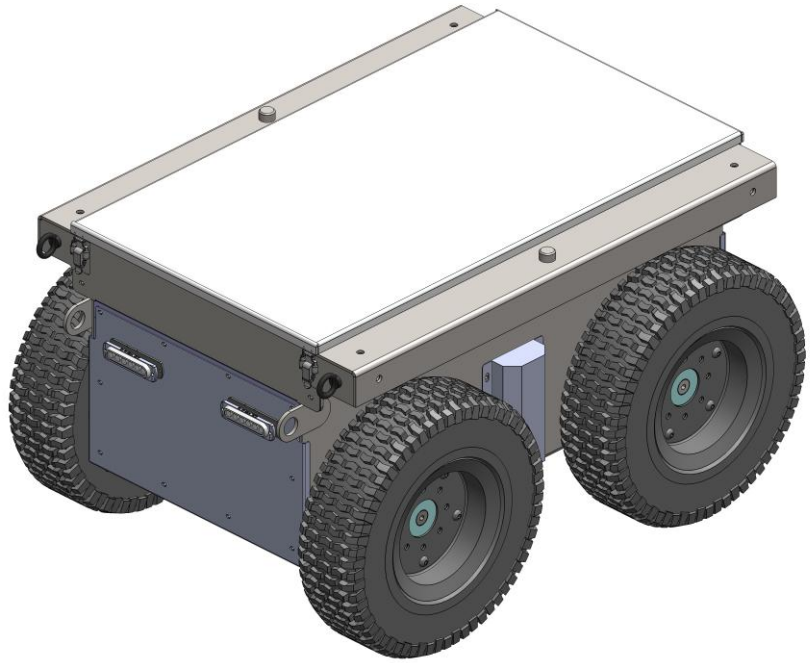

工業技術研究院機密資料 禁止複製、轉載、外流 ITRI CONFIDENTIAL DOCUMENT DO NOT COPY OR DISTRIBUTE

工業技術研究院
Industrial Technology Research Institute

ITRI-UGV-TD250-BP

SIZE AND WEIGHT	
DIMENSIONS(L x W x H)	110 x 65 x 50 (cm)
BASE WEIGHT	205(kg)
SPEED AND PERFORMANCE	
MAX. PAYLOAD	250(kg)
MAX. SPEED	0~4(km/hr)
TRANSMISSION	Differential Drive
BATTERY AND POWER SYSTEM	
BATTERY CHEMISTRY	LiFePO4
CAPACITY	30 (AH) at 48V (Customized options available)
CHARGE TIME	3hrs (If the battery is completely drained)
CHARGE CURRNET	10 Amps
CHARGE METHOD	Plug-in Charging
INTERFACING AND COMMUNICATION	
CONTROL MODES	Remote control, Computer controlled
FEEDBACK	Battery status, Motor status
COMMUNICATION	SBUS, RS485
ENVIRONMENT	
OPERATING TEMPERATURE	0 to 50 ˚C

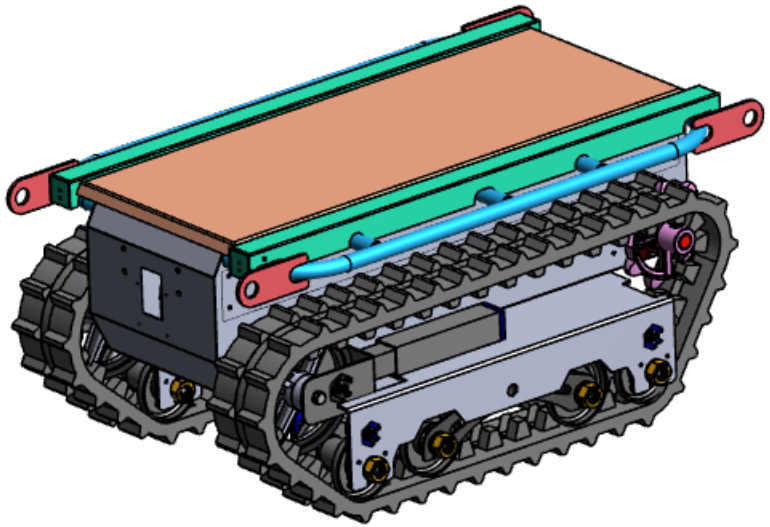

工業技術研究院機密資料 禁止複製、轉載、外流 ITRI CONFIDENTIAL DOCUMENT DO NOT COPY OR DISTRIBUTE